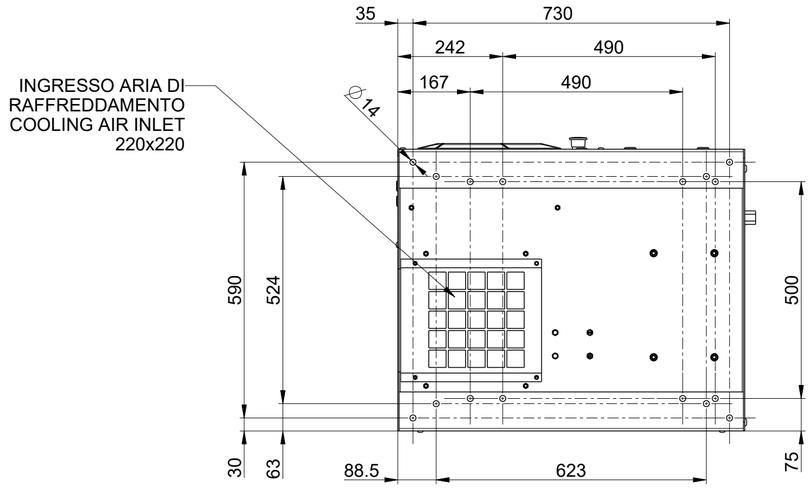

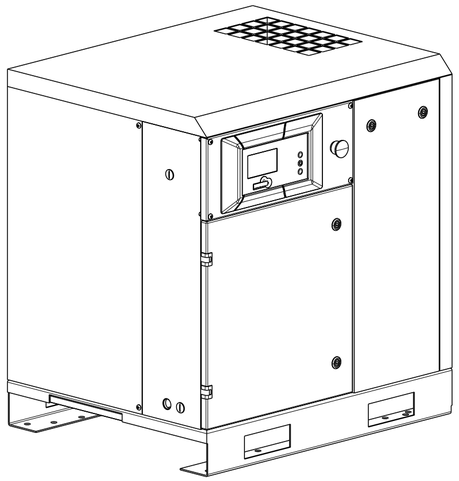

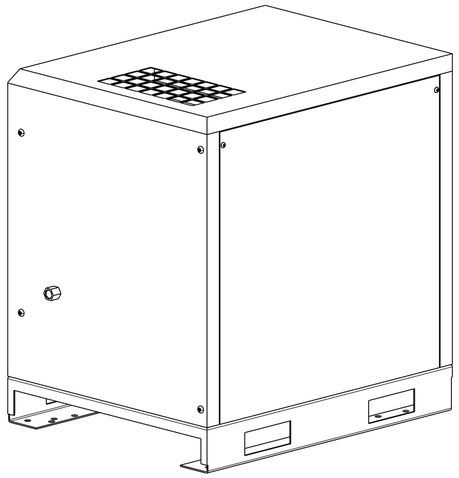

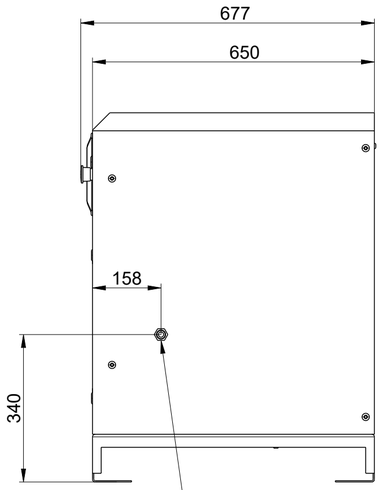

USCITA ARIA
COMPRESSA G1/2"
COMPRESSED AIR
OUTLET G1/2"

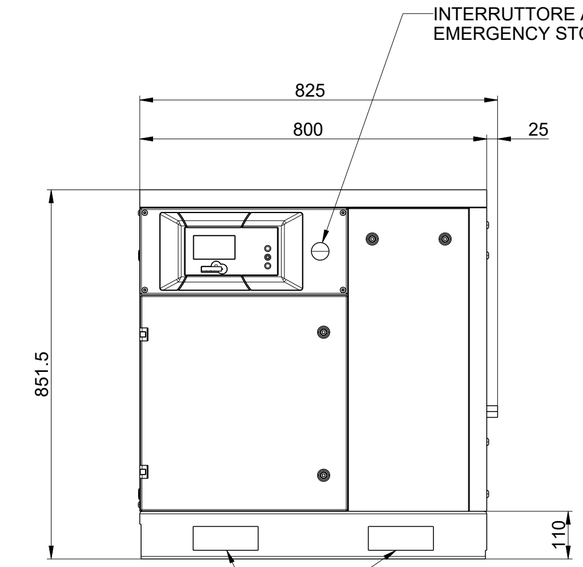

PUNTI DI SOLLEVAMENTO
LIFTING POINTS

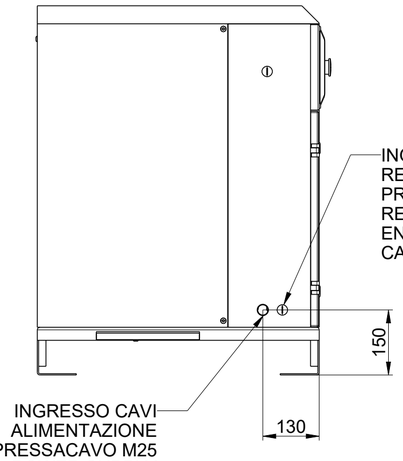

INGRESSO CAVI
ALIMENTAZIONE
PRESSACAVO M25
POWER SUPPLY
CABLES ENTRY
CABLE GLAND M25

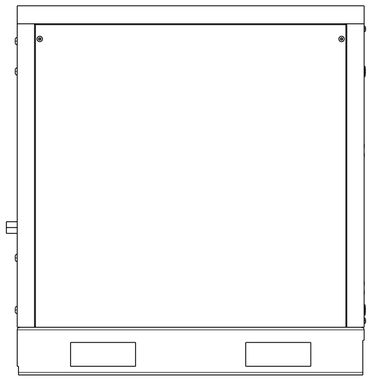

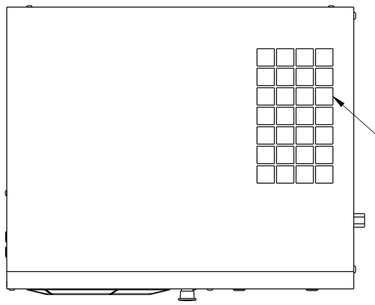

USCITA ARIA DI RAFFREDDAMENTO
DIMENSIONI: 310 x 175
COOLING AIR OUTLET
DIMENSIONS: 310 x 175

N°	MODIFY DESCRIPTION	DATE	SIGN.
-	-	-	-

DRAWN		REPLACE	COMPETENCE OF	DIMENSION WITHOUT TOLLERANCE INDICATION	ALL DIMENSIONS ARE IN MILLIMETERS
DATE	2022-03-25		R&D	ISO 22768-1-m	SCALE 1:10
SIGN.	BECCARINI				

RUGOSITI Ra um

NOT INDIC. CHAMFER

HEAT/SUPERFICIAL TREATMENT

HARDNESS

MATERIAL

--

FNA by Cristiani Family
The great family of air compressors.

DRAWING DESCRIPTION

DIM_INGOMBRO_007.5_ST_COAX_20 LGN

This drawing is propriety of FNA S.p.A. Hand over or reproduction, partial as well, is forbidden at any level. Each abuse will be legally prosecuted

DRW.N° DIM1047

A2